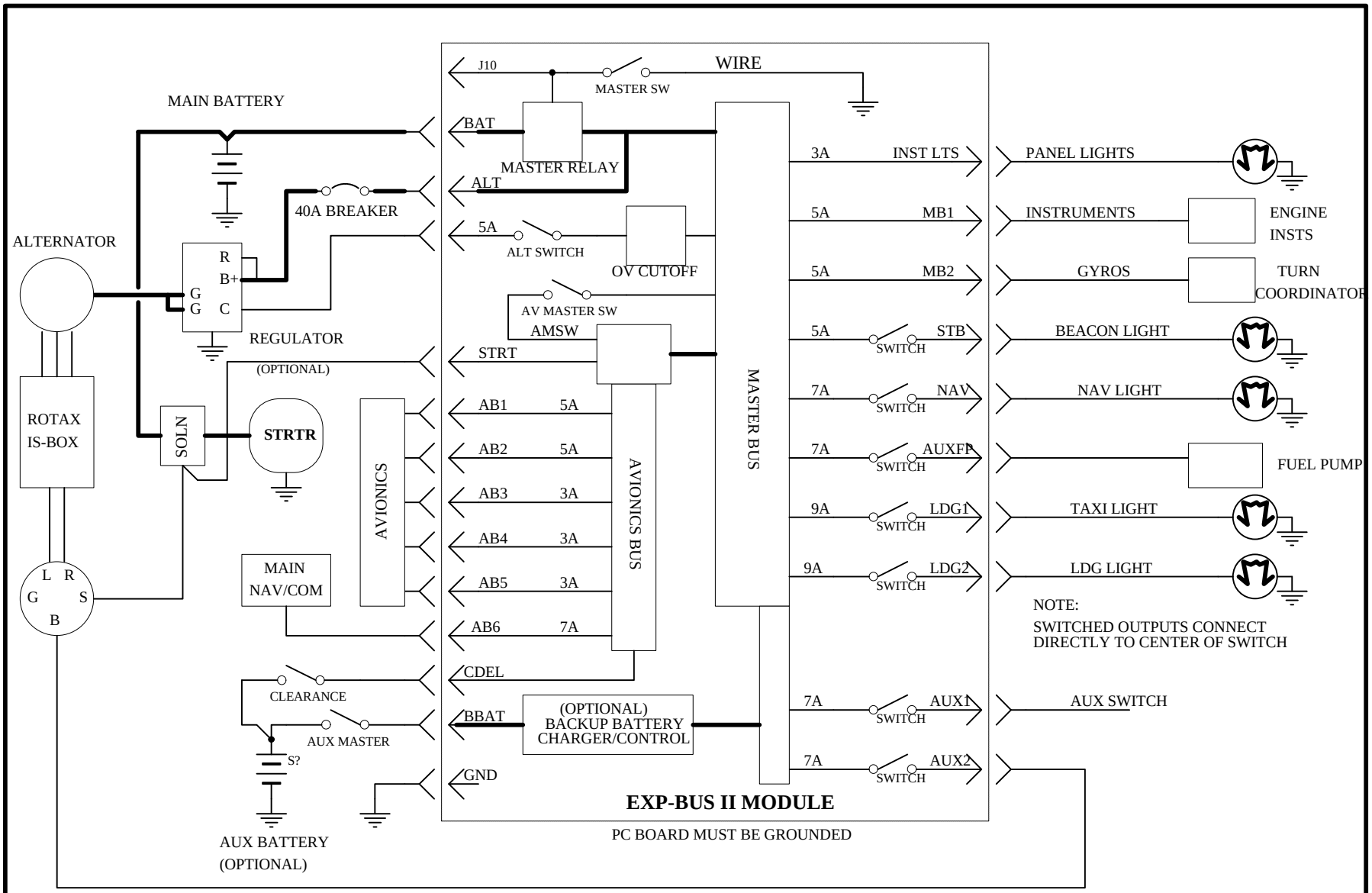

TYPICAL INSTALLATION ROTAX 912/914